OBL	POMPA DOSATRICE A MEMBRANA TIPO M–PRO *DIAPHRAGM METERING PUMP TYPE M–PRO* ATTUATORE PRO	TAVOLA 7527	REV. 0 / LINGUA I/E
		SOSTITUISCE IL –	DATA 04/06/18
	PRO ACTUATOR	*OVERALL DRAWING*	

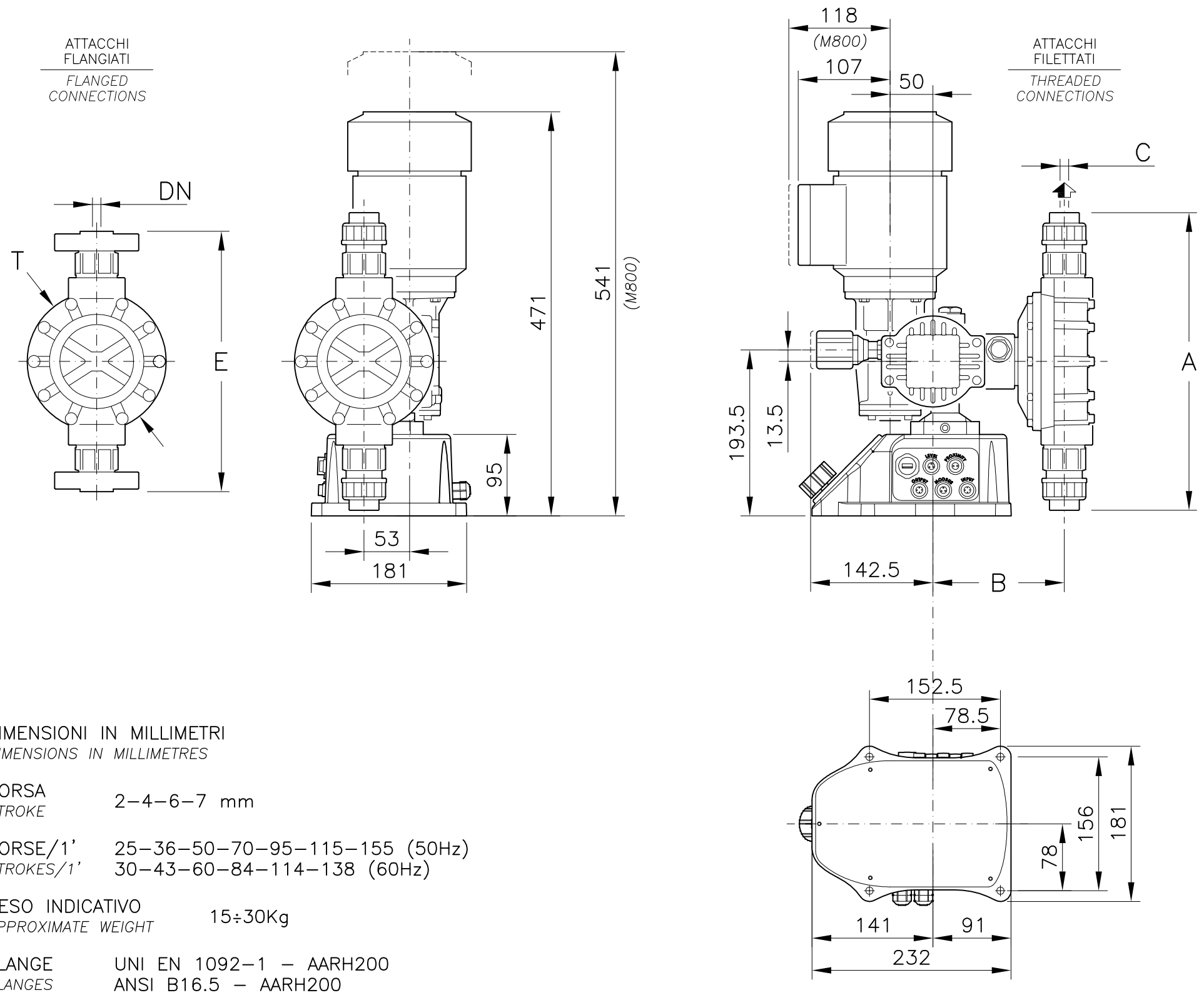

DIMENSIONI IN MILLIMETRI
DIMENSIONS IN MILLIMETRES

CORSA / *STROKE* 2–4–6–7 mm

CORSE/1' / *STROKES/1'* 25–36–50–70–95–115–155 (50Hz)
30–43–60–84–114–138 (60Hz)

PESO INDICATIVO / *APPROXIMATE WEIGHT* 15÷30Kg

FLANGE / *FLANGES* UNI EN 1092–1 – AARH200
ANSI B16.5 – AARH200

MOTORI / *MOTORS* CVE UNEL–MEC 0.25/0.37/0.75kW 4Poli
230/3/50Hz IP55 Cl.F IEC38

ALIMENTAZIONE / *POWER SUPPLY* 230 Vac 50 Hz

M		A (SS 316L)						PP (POLYPROPYLENE)						S (PVDF)						DN	
50Hz	60Hz	A BSPf	A NPT	B	C BSPf/NPT	E	T Ø	A BSPf	A NPT	B	C BSPf/NPT	E	T Ø	A BSPf	A NPT	B	C BSPf/NPT	E	T Ø	UNI	ANSI
7 11 16 23 31 37 50	9 14 19 28 36 45	166 SV 204 DV	– SV – DV	141.5	3/8" BSPf – NPT	180 SV 180 DV	114	239 SV 253 DV	– SV – DV	142	3/8" BSPf – NPT	215 SV 215 DV	117	– SV – DV	– SV – DV	–	–	– SV – DV	–	15	1/2"
35 49 75 101 120 155	42 58 90 118 145	181 SV 219 DV	195 SV 235 DV	141.1	3/8" BSPf 1/2" NPT	195 SV 195 DV	129	253 SV 267 DV	279 SV 279 DV	141.8	3/8" BSPf 1/2" NPT	229 SV 229 DV	133	– SV 277 DV	– SV 277 DV	145.5	1/2"	– SV 227 DV	136	15	1/2"
102 131 201 261 321 421	119 158 236 312 384	235 SV – DV	235 SV – DV	151.6	3/4"	235 SV – DV	159	348.6 SV – DV	353 SV – DV	154	3/4"	303 SV – DV	162	349 SV – DV	349 SV – DV	157	3/4"	299 SV – DV	169.4	20	3/4"
150 190 301 431 521 660 800	180 228 360 519 620	307 SV – DV	307 SV – DV	158	1"	292 SV – DV	189	386.4 SV – DV	404 SV – DV	157	1"	336 SV – DV	194	356.3 SV – DV	373.9 SV – DV	167	1"	305.9 SV – DV	197.9	25	1"

DISEGNATO L.SUFANA	CONTROLLATO ORIGINALE IN ROSSO C.V.CARBONE	DISTRIBUZIONE DA UV DT UA GQ UC PR PdC
LUT/PROG.		

M006 R04

REV.	MODIFICHE	CONTR.	DATA
.	.	.	.

QUESTO DISEGNO APPARTIENE ALLA OBL S.R.L. NESSUNA PARTE DI QUESTO DOCUMENTO PUO' ESSERE MODIFICATA, PRESTATA, RIPRODOTTA O COPIATA (INTERAMENTE O IN PARTE) – THIS DRAWING IS THE PROPERTY OF OBL S.R.L. NO PART OF THIS DOCUMENT MAY BE MODIFIED, LOANED, REPRODUCED NOR COPIED (WHOLE OR IN PART)